Typical Deck Design Document
Town of Floyd Office of Code Enforcement
8299 Old Floyd Rd. Rome, N.Y. 13440
Ken - Cell (315) 335-3889 / Fax (315) 865-4126

Date _____ Tax Map No._____ Permit No._____
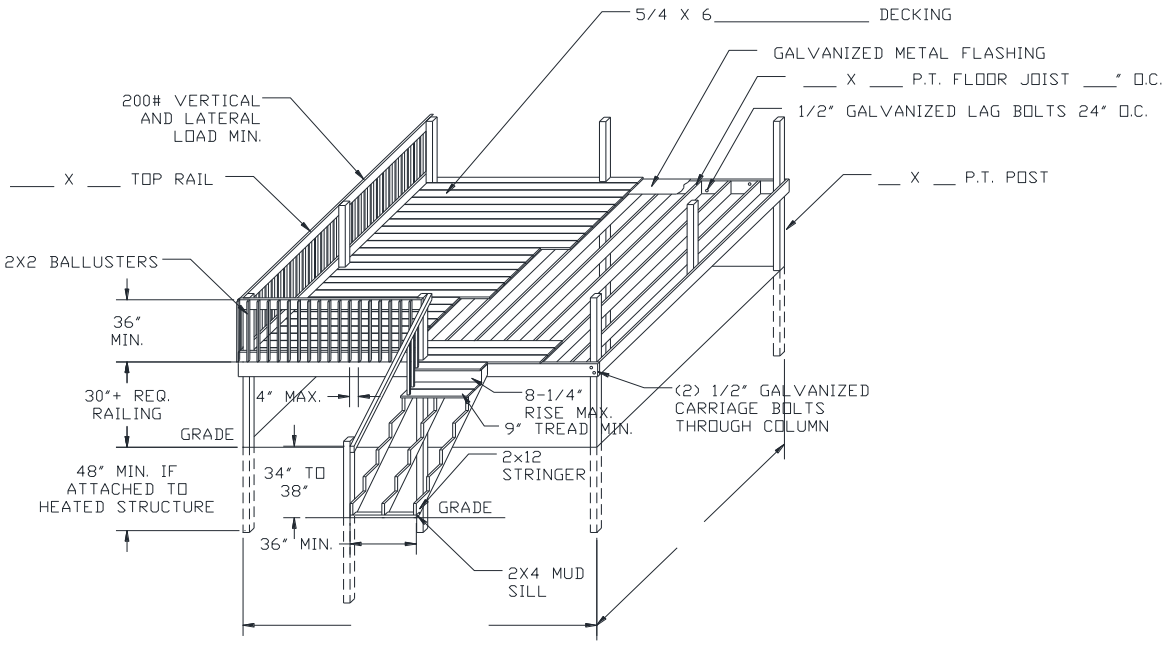
This design is hereby made to the Office of Codes Enforcement for the issuance of a Building, Sanitation, and/or Zoning Permit pursuant to the N.Y.S. Uniform Fire Prevention and Building Code for the construction, renovation, or alteration of any structure governed by this code as herein described. The applicant or owner agrees to comply with all applicable laws, ordinances, regulations and conditions expressed, including visits to the construction site for routine and special inspections.